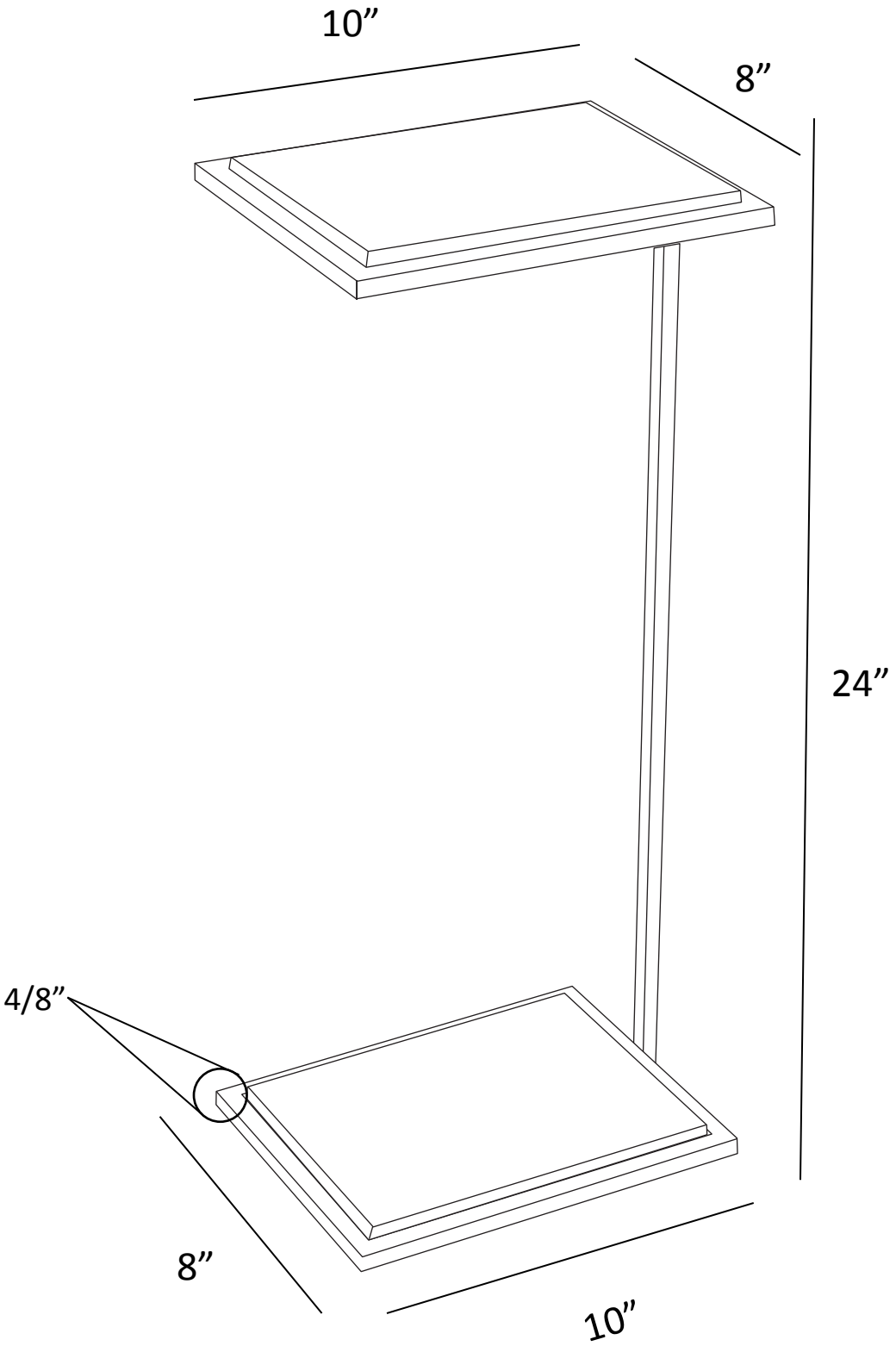

Item no.	Product Name:	Overall dimensions:	
TA385	Delma	10”X24”X8”	RENWIL EST. 1967