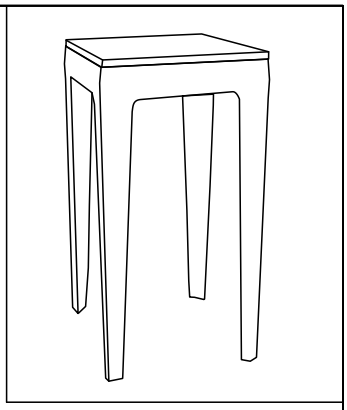

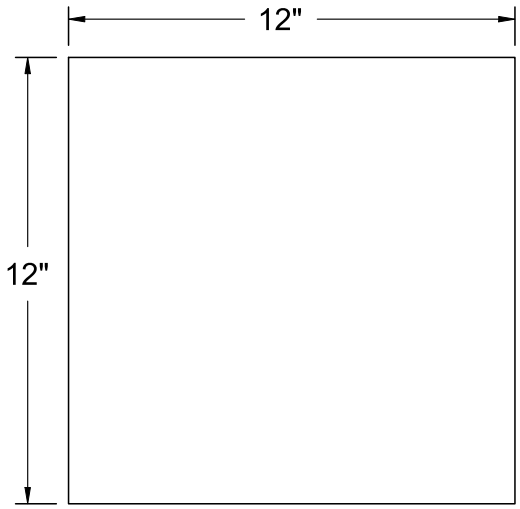

TOP VIEW

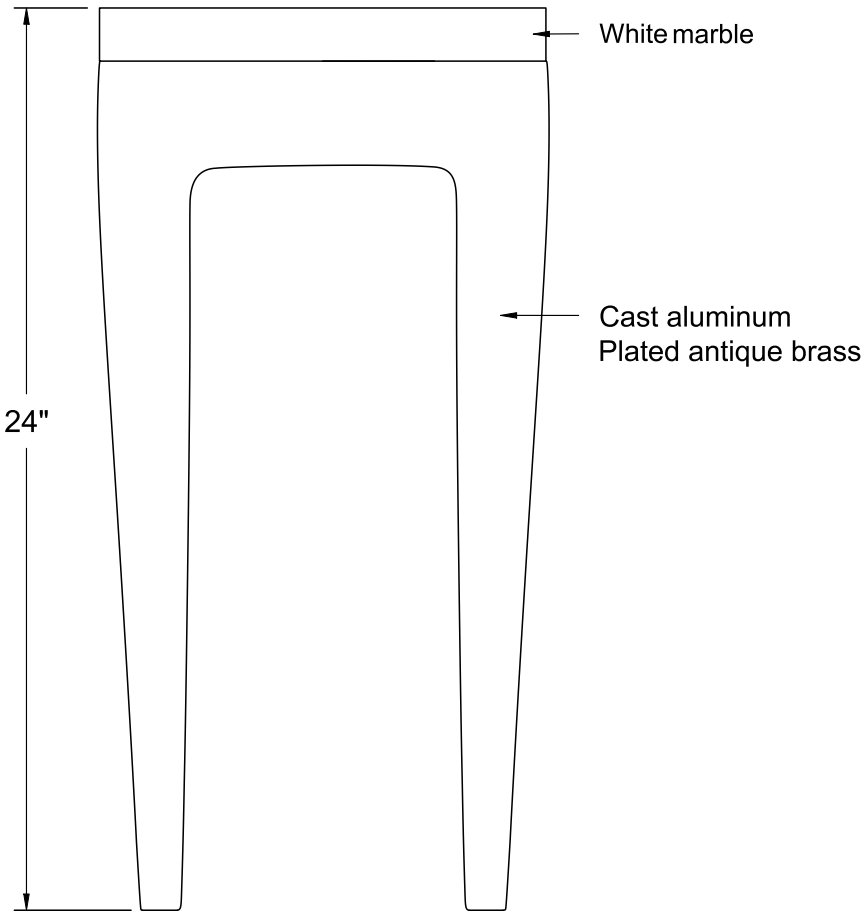

FRONT VIEW

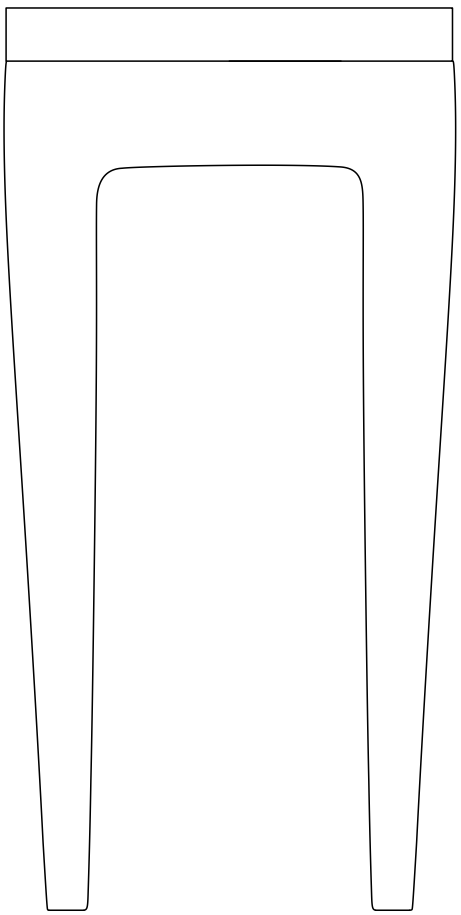

SIDE VIEW

Item number:	Product name:	Overall dimensions:	
TA469	Abby	12"W x 24"H x 12"D	RENWIL® EST. 1967