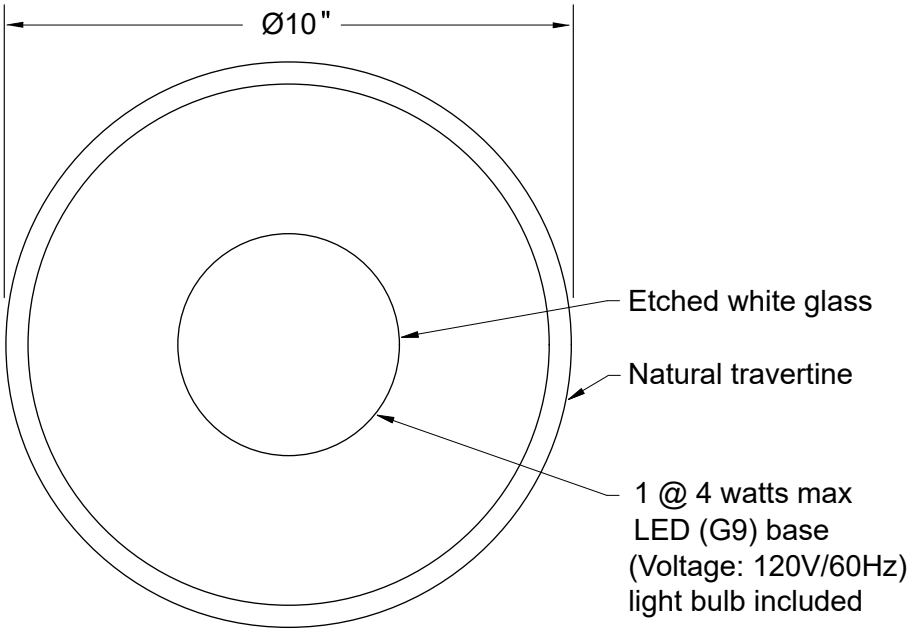

FRONT VIEW

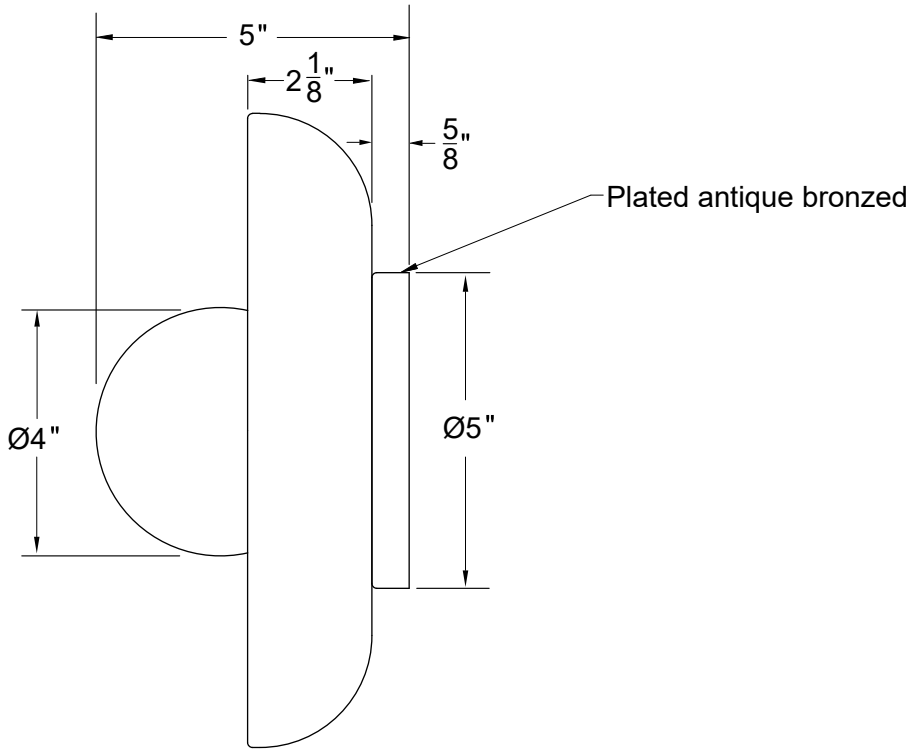

SIDE VIEW

Item number: WS155	Product name: Myrtos	Overall dimensions: 10"W x 10"H x 5"D		

Intertek

RENWIL® EST. 1967