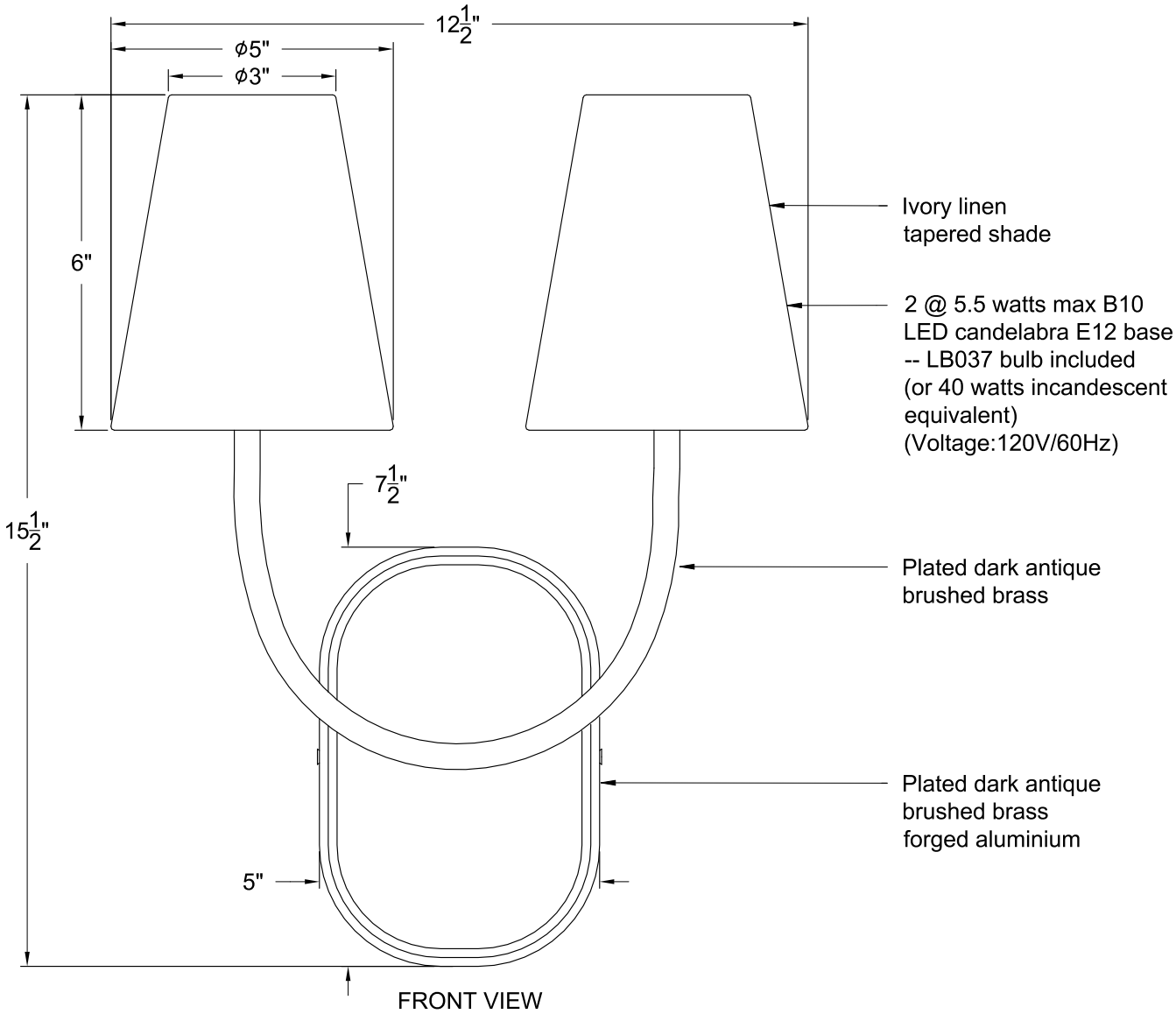


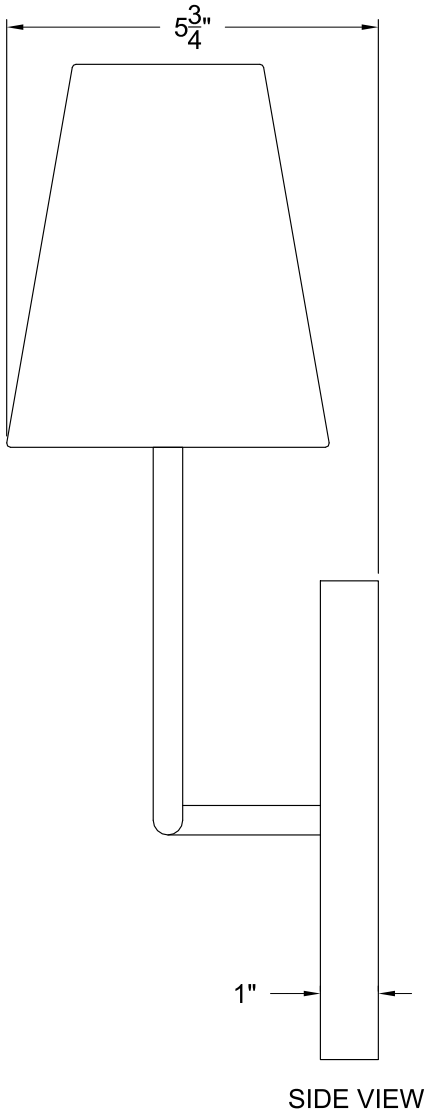


| Item number: | Product name: | Overall dimensions: | | |
|---|---|---|---|---|
| WS156 | Maddie | 12 1/2"W x 15 1/2"H x 5 3/4"D | c UL us | RENWIL® EST. 1967 |