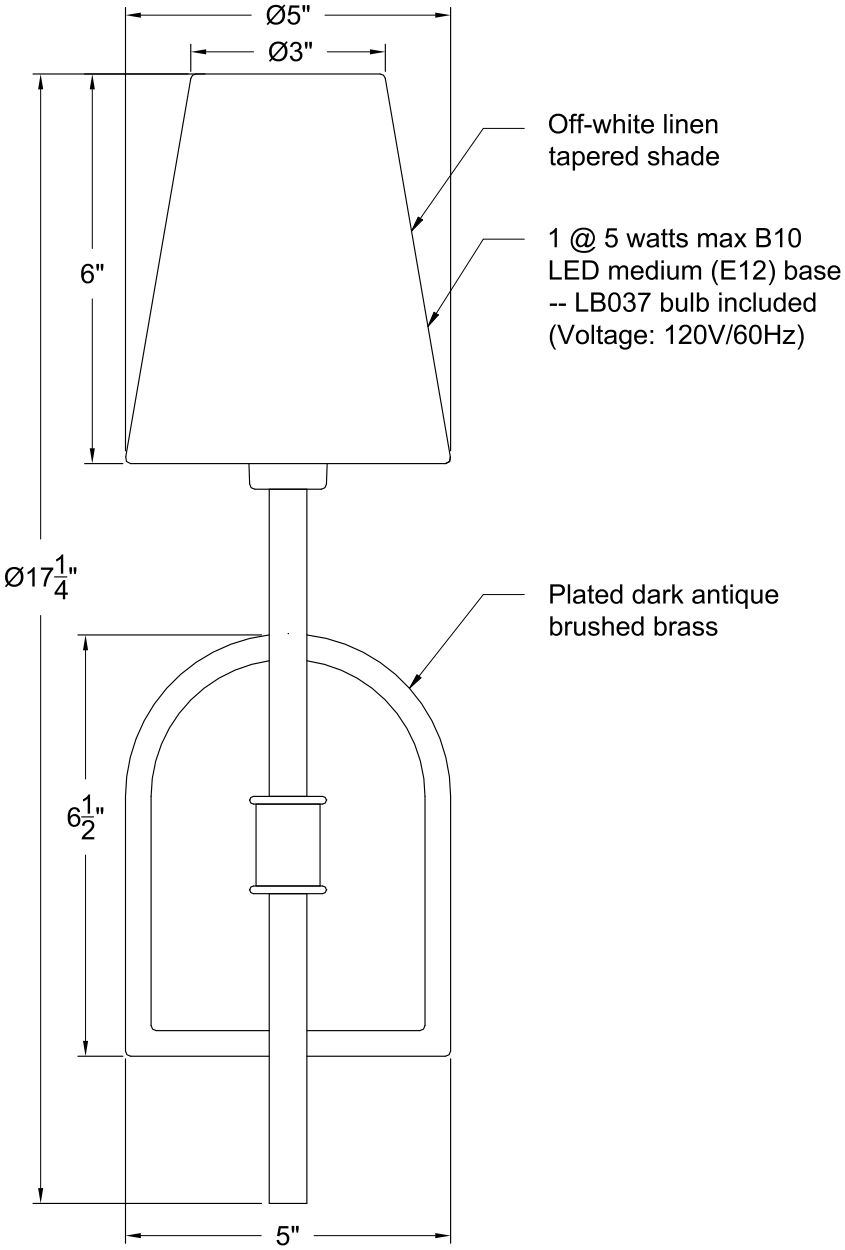


FRONT VIEW

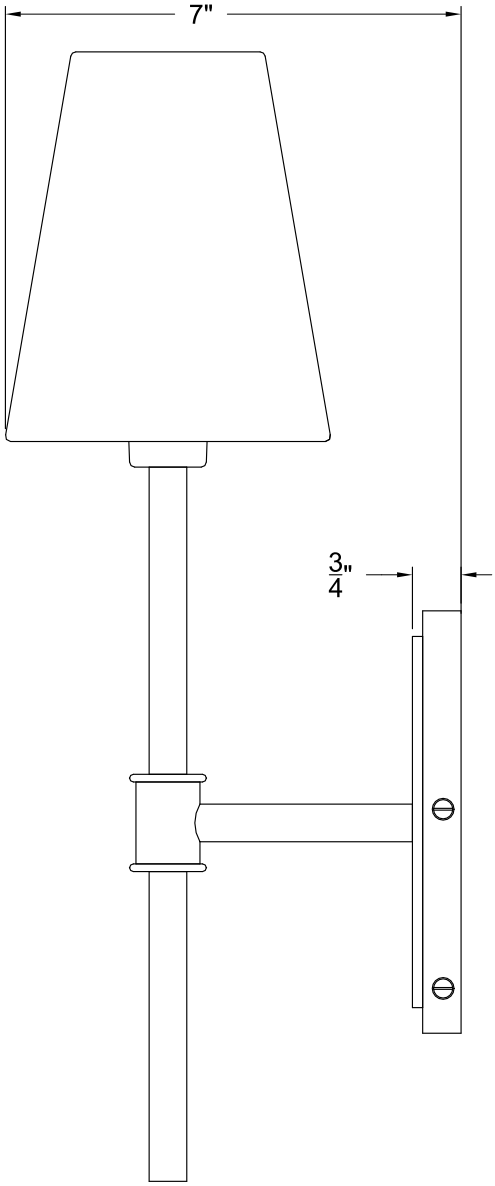


SIDE VIEW

| Item number: | Product name: | Overall dimensions: | | |
|---|---|---|---|---|
| WS166 | Montreux | 5"W x 17 1/4"H x 7"D | | RENWIL® EST. 1967 |